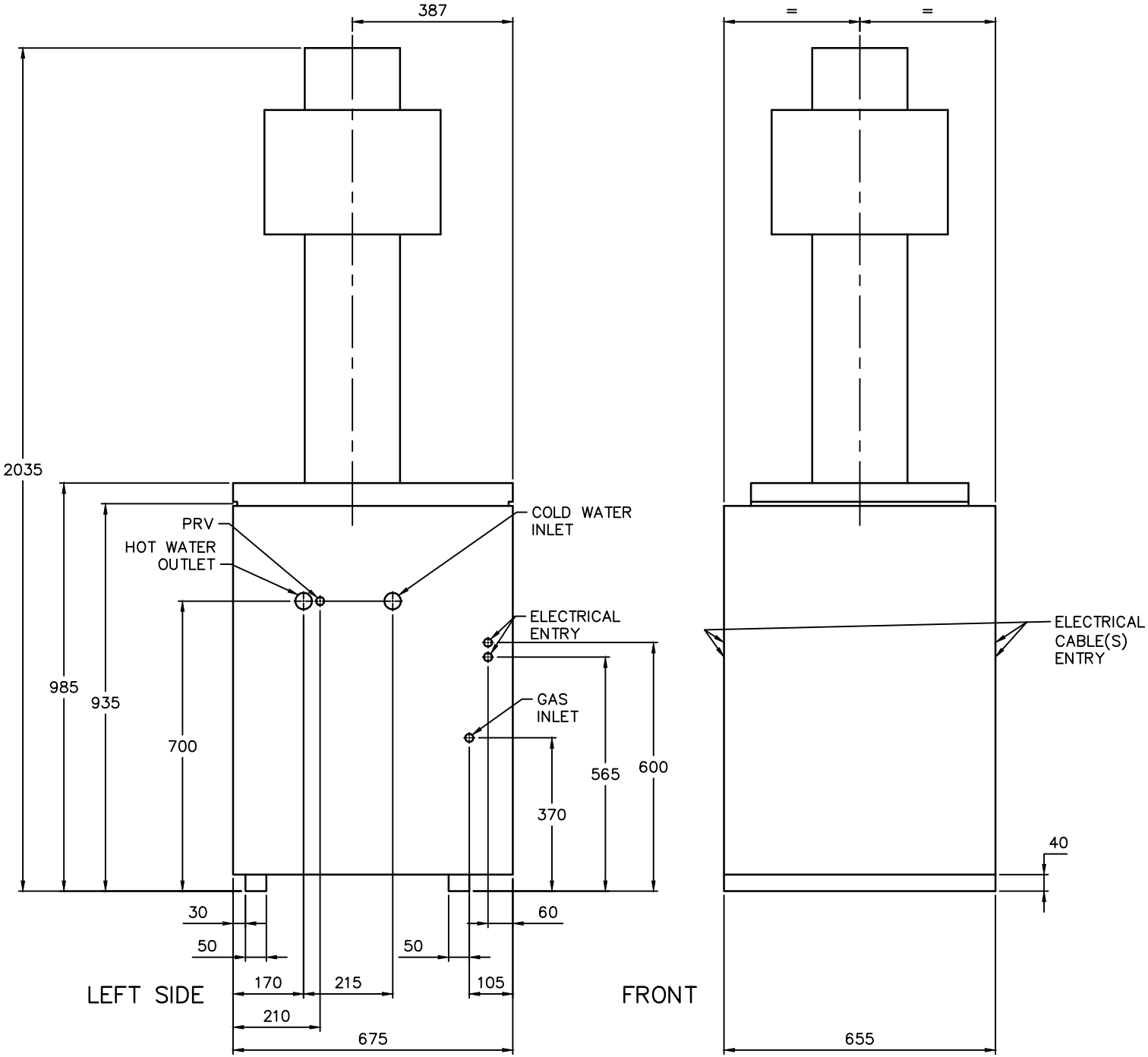

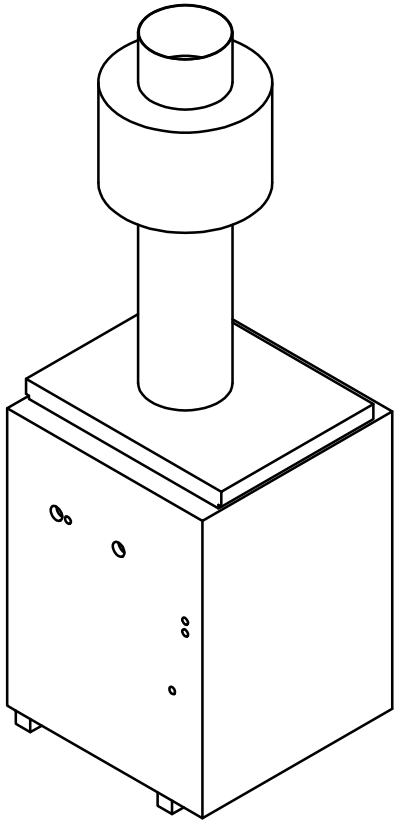

RAYPAK WATER HEATER OUTDOOR MODEL B0350/HWT

SK5105 REV-BD A3 06/11