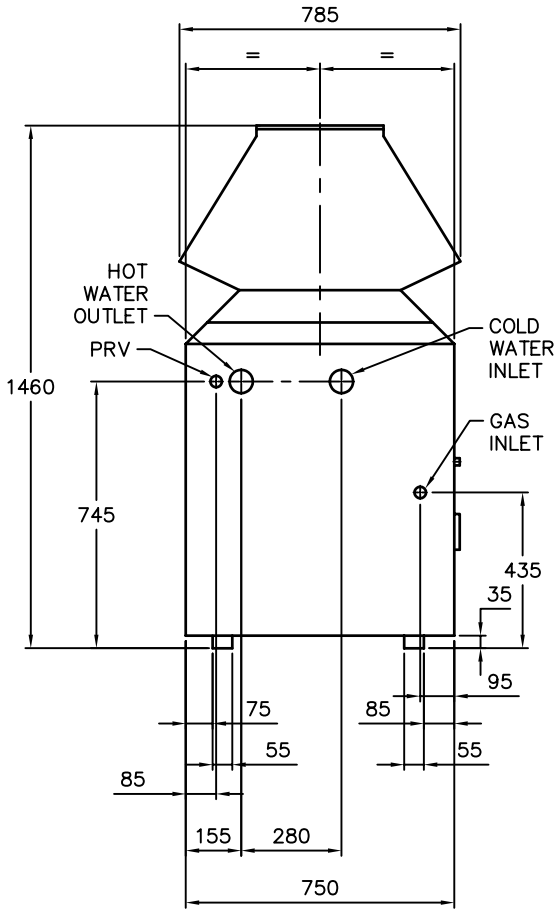

LEFT SIDE

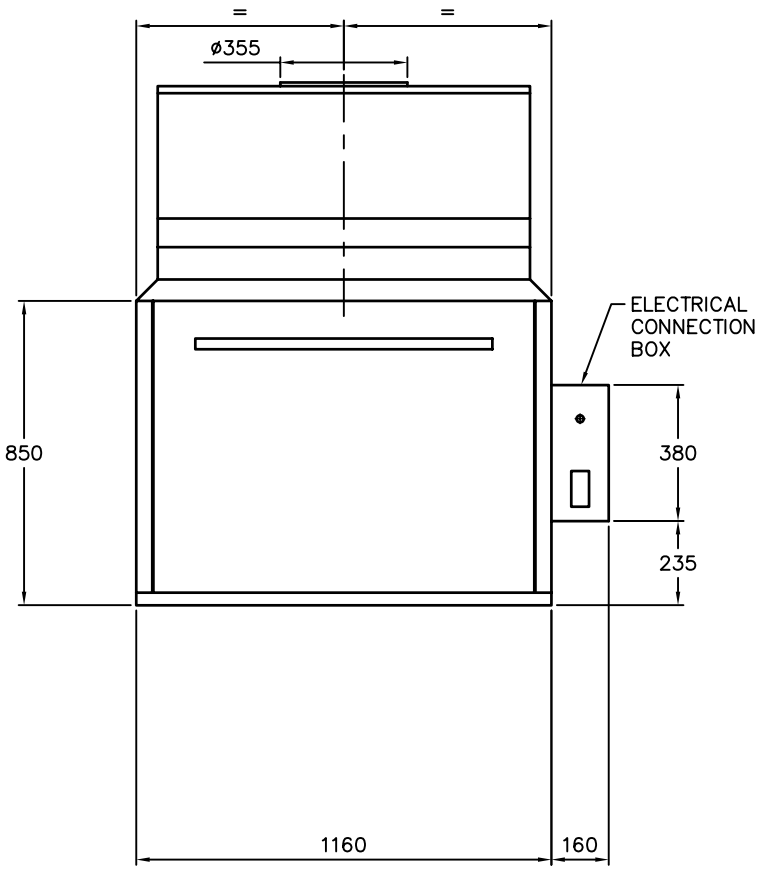

FRONT

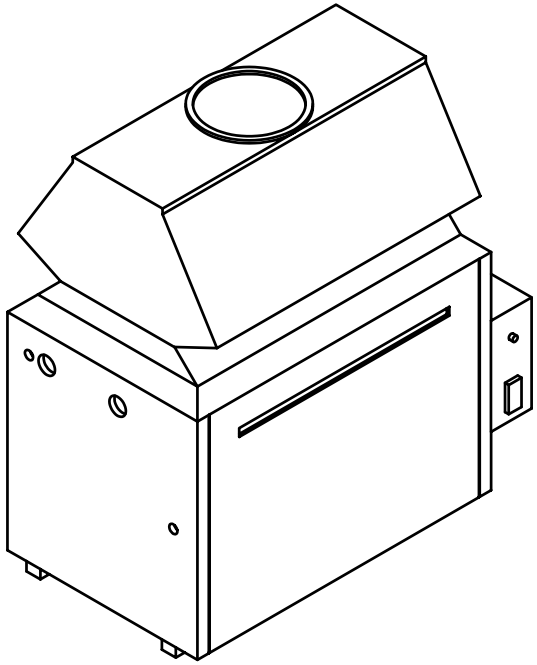

RAYPAK WATER HEATER INDOOR MODEL B0868/ID

SK5125 REV-BD A3 2/04 1:15